Pre-Sure™ Cap

Make **Sure** first, before removing the cap!

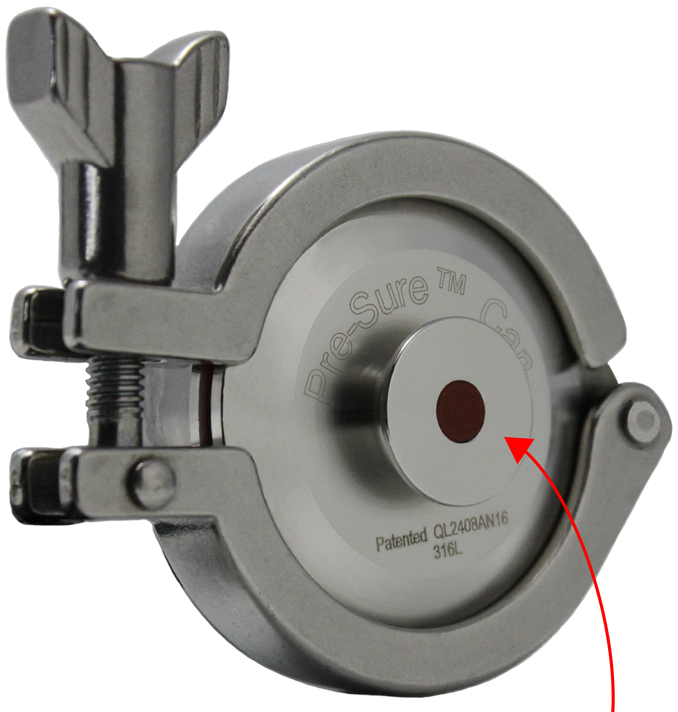

No Pressure

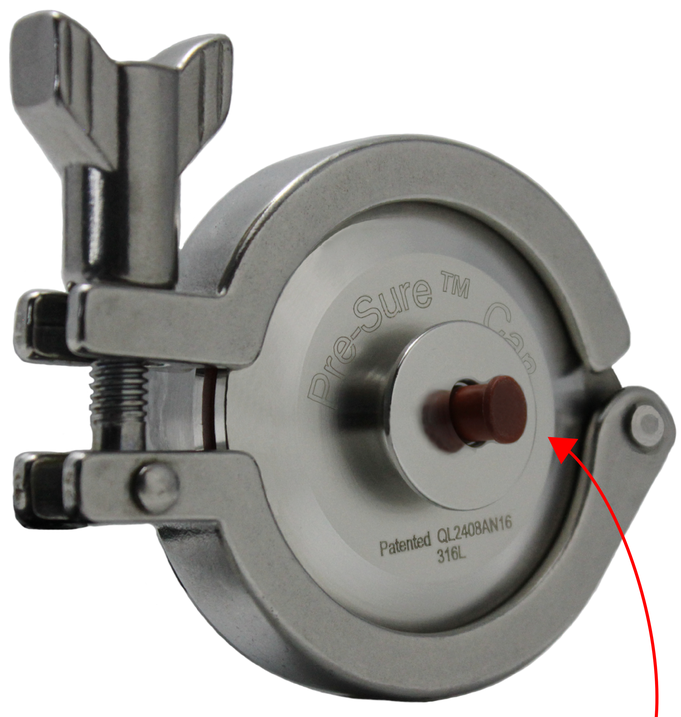

Low Pressure

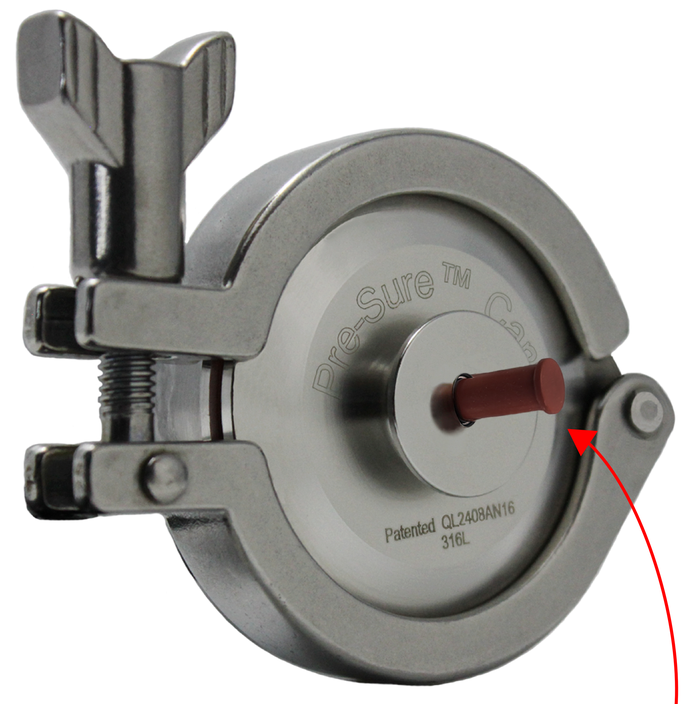

High Pressure

STOP unsafe actions and injuries
STOP expensive clean up
STOP product loss
STOP dangerous cap removal practice

Features

- USP Class 6 Silicone
- 316L Stainless Steel
- First Indication at 5PSI (35kPA) - indicating fluid in the pipe
- Second indication at 15PSI (100kPA) - indicating pressure in the pipe - the opening through the cap is hygienically sealed
- In closed position, the button hygienically seals the opening through the gap
- Maximum Pressure 200PSI (13.7Bar)
- Maximum Temperature 275°F (135°C) - MUST NOT be installed on steam lines
- Fail safe design - if diaphragm fails, pressure and product is relieved through the hole in the stainless steel
- 30,000 cycles or 6 months before replacement
- Anti pressure surge (water hammer) protection design
- Easy clean and replacement diaphragm design
- Safe and easy removal of cap feature incorporated
- No springs or power required
- Direct replacement for standard cap and seal

Stainless Steel Pre-Sure™ Cap Set
Part code: 326 020

Easy removal of cap using central handle/knob - fork from clamp can be used under knob if needed.

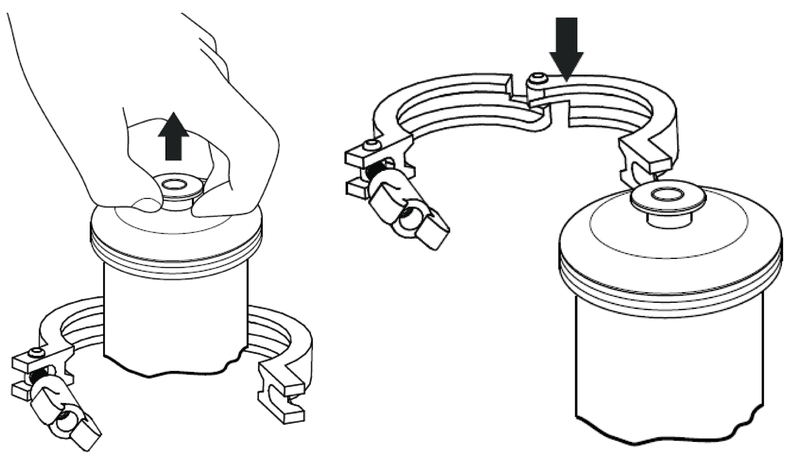

Replaceable Diaphragm
Part code: 226 020

Distributed by:

MUST SEE VIDEO